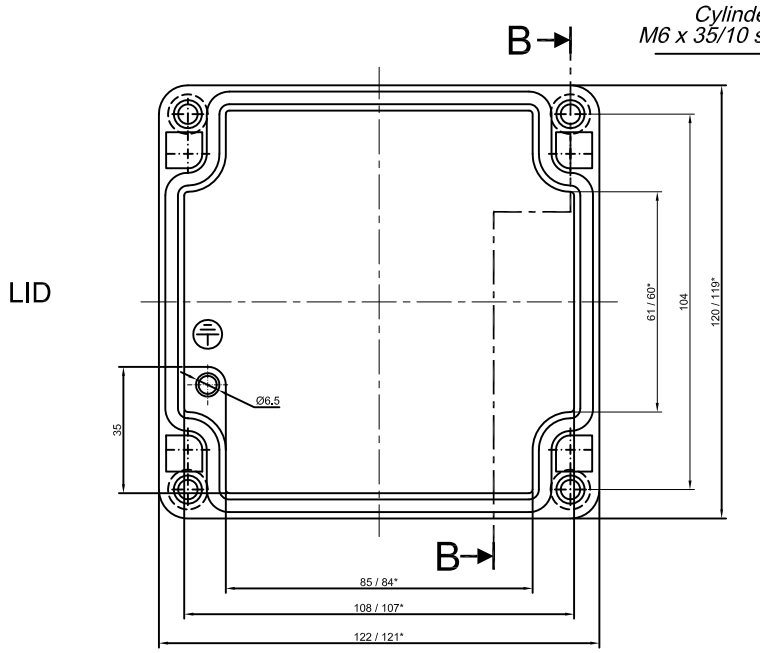

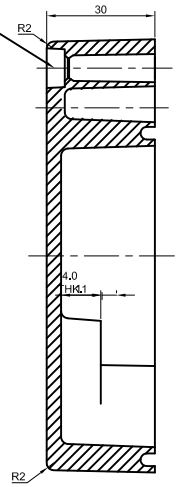

SECTION -B-B

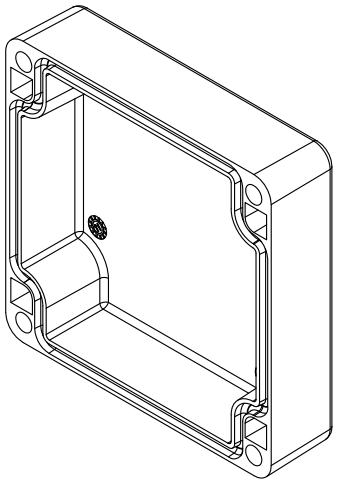

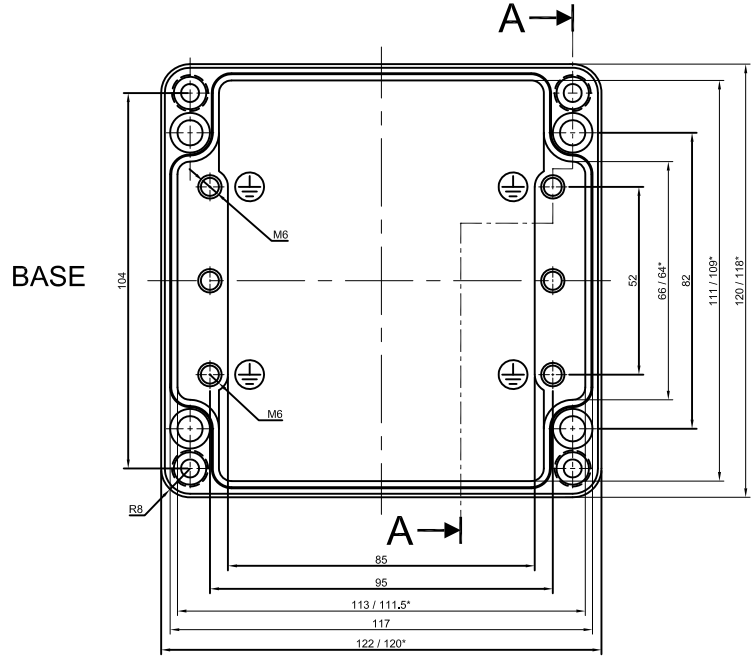

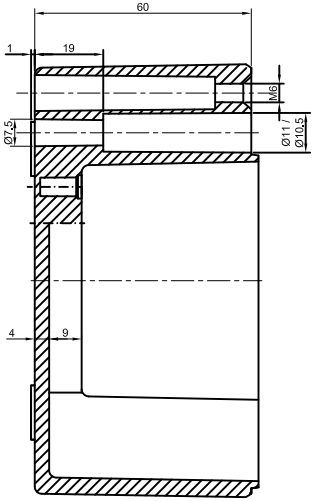

SECTION A-A

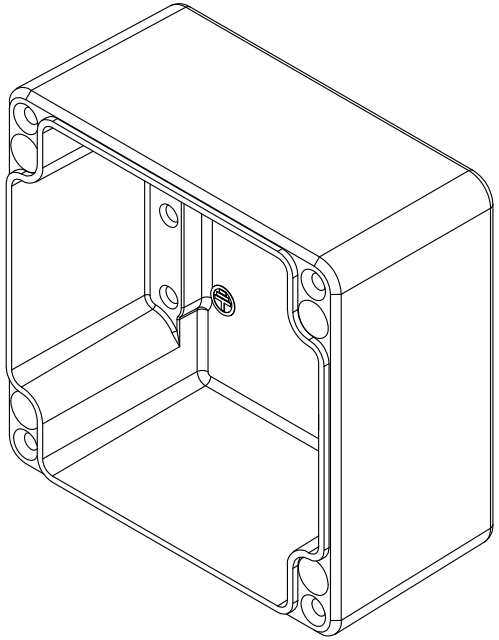

* = Conical form tapering downward.
Untoleranced dimensions per GTA 13/5 DIN 1688

ACCESSORIES

PART NAME	QTY.	AVILABILITY
MOUNTING PLATE	1	Y
EXTERNAL HINGE	2	Y
INTERNAL HINGE	-	N
MOUNTING BRACKETS	4	Y
NEOPRENE/SILICON GASKET	1	Y
DIN RAIL TS15	-	N
DIN RAIL TS35	1	Y

QUANTITY	MATERIAL :-	MACH.NAME	DATE	SIGN	NAME	
1	Alsi12 DIN230	-			RRPL	DESIGN
		TITLE :- JUNCTION BOX 122 x 120 x 91	30/04/12		MANOJ	DRAWN
			30/04/12		PAVAN	CHECKED
			———		S.D.	APPROVED
TOLERANCE	WEIGTH : - / FINISH : NATURAL	Raychem RPG (P) Limited, Ceat Mahal Annexe, Dr. Annie Besant Road, Worli, Mumbai 400030, Web : www.raychemrpg.com	SCALE	PARTNO.	0	
±0.2 DIMENSIONS			REV 0	DRG. NO.	AJB-12212091	
±0.2 HOLES	ALL DIMNSION ARE IN MM					
±1.0° ANGLES	RJ 22					

PROPERTY OF RaychemRPG (P) LTD.
ALL RIGHTS RESERAVED AND/OR PHOTOCOPYING THIS DOCUMENT
TO A PERSON WITHOUT RaychemRPG (P)LTD. WRITTEN AUTHORIZATION IS PROHIBITED